| 日期/Date | | 归档员 Filing Clerk |
|---|---|---|

技术参数:
- 插针数: 12
- 额定电流
  信号针: 7A
- 额定电压: 25V~/60V–
- 额定脉冲电压: 1.5KV
- 污染等级: 3
- 绝缘电阻: ≥$10^{12}$Ω
- 温度范围: –40℃ ... +130℃
- 阻燃等级: V0 (UL94)
- 接触电阻: ≤5mΩ
- 插拔次数: ≥100
- 插体材料: PBT
- 插针材料: 铜合金
- 电镀材料: 金
- PCB插焊连接
  - 信号针: ø0.6mm

仅适用不封底下壳: HR23–BK–D2.7,HR23–BK/R–OD2.7
HR23–BK/R–OM2.5

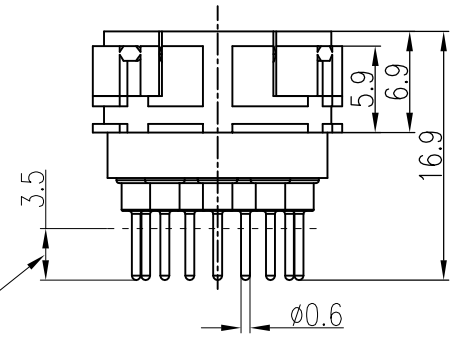


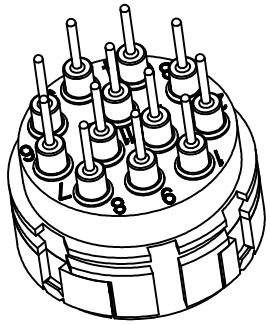

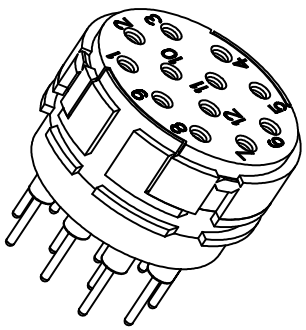

Technical specification:
- Number of contacts: 12
- Rated current
  signal contact: 7A
- Rated voltage: 25V~/60V–
- Rated impulse voltage: 1.5KV
- Pollution degree: 3
- Insulation resistance: ≥$10^{12}$Ω
- Temperature range: –40℃ ... +130℃
- Flammability acc.to UL94: V0 (UL94)
- Contact resistance: ≤5mΩ
- Mating cycles: ≥100
- Material of insert: PBT
- Material of contact: copper alloy
- Contact plating: Au
- PCB solder termination
  - signal contact: ø0.6mm

Suitable only for bulkhead mounted housings: HR23–BK–D2.7, HR23–BK/R–OD2.7,HR23–BK/R–OM2.5

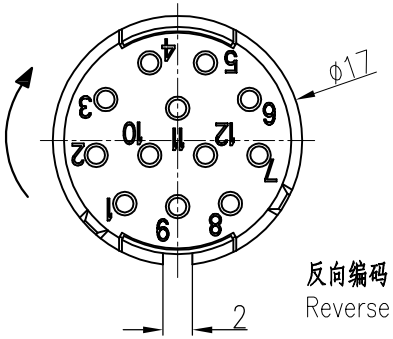


PCB孔细节
PCB layout

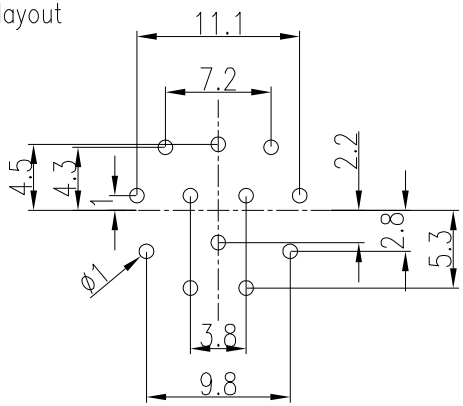


| 标记 Mark | 处数 Number | 变更描述/Description | 签名 Signature | 日期 Date |
|---|---|---|---|---|
| | | | | |
| | | | | |
| | | | | |

| | 姓名/Name | 日期/Date | | 姓名/Name | 日期/Date |
|---|---|---|---|---|---|
| 绘图 Drawn | TC CHEN | 04.05.2016 | 标准化 Stand. | – | – |
| 审核 Checked | ZM LIN | 04.05.2016 | | | |
| 工艺 Process | – | – | 批准 Approved | YY LUO | 04.05.2016 |

| | | | |
|---|---|---|---|
| 表面处理 Finish | – | | |
| 材料 Material | – | | |
| 比例 Scale | 版本 REV. | 重量 Weight | 数量 Qty. |
| 2:1 | V1.1 | 5.8g | – |

All Dimensions in mm
Original Size DIN A 4

| | |
|---|---|
| 图号 Drawing No. | – |
| 产品代号 Part Code | HR23–012R–FTHT |
| 产品料号 Part No. | 1810120240101 |
| 产品名称 Part Name | – |

厦门唯恩电气有限公司
XIAMEN WAIN ELECTRICAL CO.LTD