日期/Date	归档员 Filing Clerk

技术参数:

- 产品系列: M12 A-code
- 插针数: 4(M12-M04A),3(M12-F03A)
- 额定电流(40℃): 4A
- 额定电压: 125V
- 额定脉冲电压: 1500V
- 污染等级: 3
- 接触电阻: ≤10mΩ
- 绝缘电阻: ≥100MΩ
- 锁紧方式: 螺纹式M12*1
- 电缆类型: PVC
- 线规: 0.34mm² (AWG22)
- 防护等级: IP67
- 插拔次数: >100
- 温度范围: -25℃ ... +85℃
- 锁紧螺帽: 金属
- 外壳材料: TPU
- 插体材料: PA
- 插针材料: 铜合金
- 插针电镀材料: 金

Technical specification:

- Series: M12 A-Code
- Number of contacts: 4(M12-M04A),3(M12-F03A)
- Rated current (40℃): 4A
- Rated voltage: 125V
- Rated impulse voltage: 1500V
- Pollution degree: 3
- Contact resistance: ≤10mΩ
- Insulation resistance: ≥100MΩ
- Connector locking system: screw M12*1
- Cable type: PVC
- Wire gauge: 0.34mm² (AWG22)
- Degree of protection: IP67
- Mating cycles: >100
- Temperature range: -25℃ ... +85℃
- Material of locking system: Metal
- Material of housing: TPU
- Material of insert: PA
- Material of contact: copper alloy
- Contact plating: Au

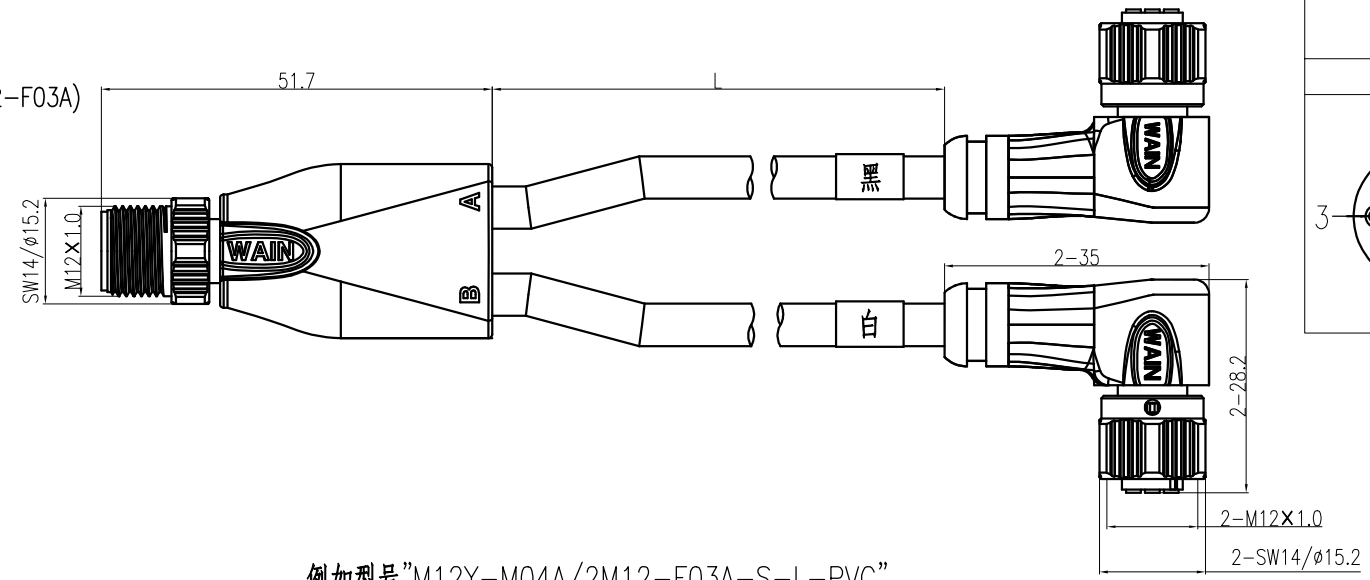

例如型号"M12Y-M04A/2M12-F03A-S-L-PVC",
"L"表示带线长度，单位m。
Ex: Part code "M12Y-M04A/2M12-F03A-S-L-PVC",
the "L" represents the cable length, unit m.

针位图
Contact arrangements

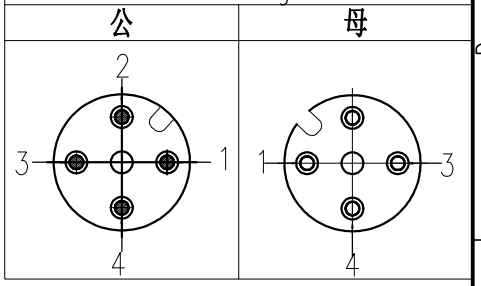

接线图
Circuit diagram

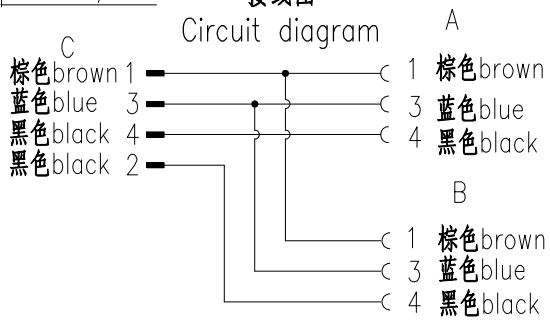

产品料号 Part No.	产品代号 Part Code	线缆长度(L)	重量Weight
1713020030320	M12Y-M04A/2M12-F03A-S-5.0-PVC	5m	360g
1713020030323	M12Y-M04A/2M12-F03A-S-1.5-PVC	1.5m	154.6g
-	M12Y-M04A/2M12-F03A-S-L-PVC	Lm	-

标记 Mark	处数 Number	变更描述/Description		签名 Signature	日期 Date

	姓名/Name	日期/Date		姓名/Name	日期/Date
绘图 Drawn	YP ZHU	19.12.2023	标准化 Stand.	-	-
审核 Checked	Q GAO	19.12.2023			
工艺 Process	-	-	批准 Approved	HQ ZHANG	19.12.2023

表面处理 Finish	-	图号 Drawing No.	-
材料 Material	-	产品代号 Part Code	M12Y-M04A/2M12-F03A-S-L-PVC
		产品料号 Part No.	-
比例 Scale	版本 REV.	重量 Weight	数量 Qty.
1:1	V1.0	-	-
		产品名称 Part Name	-

All Dimensions in mm
Original Size DIN A 4

厦门唯恩电气有限公司
XIAMEN WAIN ELECTRICAL CO.LTD