| 日期/Date | | 档案员 Filing Clerk |
|---|---|---|

M公制螺纹/Metric Thread

| 序号 No. | 产品名称 Part code | 产品料号 Part NO. | 外螺纹规格AG Outside Thread | 内螺纹规格LG Inside Thread | 外螺纹长度GL Outside thread length | 总长L Total length | 扳手尺寸SW Wrench size | 重量/Weight g |
|---|---|---|---|---|---|---|---|---|
| 1 | WNSC-M12M16 | 1021030111002 | M12*1.5 | M16*1.5 | 5 | 17 | 18 | 7.9 |
| 2 | WNSC-M16M20 | 1021030131002 | M16*1.5 | M20*1.5 | 6 | 20 | 22 | 13 |
| 3 | WNSC-M20M25 | 1021030151002 | M20*1.5 | M25*1.5 | 8 | 26.5 | 27 | 29.2 |
| 4 | WNSC-M25M32 | 1021030181002 | M25*1.5 | M32*1.5 | 7.5 | 25 | 35 | 29 |
| 5 | WNSC-M32M40 | 1021030191002 | M32*1.5 | M40*1.5 | 10 | 31 | 45 | 39.1 |
| 6 | WNSC-M40M42 | 1021030201501 | M40*1.5 | M42*2 | 10 | 36 | 50 | 160.2 |
| 7 | WNSC-M40M50 | 1021030201002 | M40*1.5 | M50*1.5 | 10 | 27.5 | 55 | 103 |
| 8 | WNSC-M50M63 | 1021030461002 | M50*1.5 | M63*1.5 | 9 | 26.5 | 65 | 115 |
| 9 | WNSC-M20M32 | 1021030151003 | M20*1.5 | M32*1.5 | 8 | 25 | 35 | 37.8 |

PG制螺纹/PG Thread

| 序号 No. | 产品名称 Part code | 产品料号 Part NO. | 外螺纹规格AG Outside Thread | 内螺纹规格LG Inside Thread | 外螺纹长度GL Outside thread length | 总长L Total length | 扳手尺寸SW Wrench size | 重量/Weight g |
|---|---|---|---|---|---|---|---|---|
| 1 | WNSC-PG7PG9 | 1021030011002 | PG7 | PG9 | 5 | 17 | 17 | 6 |
| 2 | WNSC-PG9PG11 | 1021030021002 | PG9 | PG11 | 6 | 20 | 20 | 10.4 |
| 3 | WNSC-PG11PG13.5 | 1021030031002 | PG11 | PG13.5 | 6 | 20 | 22 | 6.2 |
| 4 | WNSC-PG13.5PG16 | 1021030041002 | PG13.5 | PG16 | 6.5 | 22 | 24 | 8.3 |
| 5 | WNSC-PG16PG21 | 1021030051002 | PG16 | PG21 | 6.5 | 22 | 30 | 22.2 |
| 6 | WNSC-PG21PG29 | 1021030061002 | PG21 | PG29 | 8 | 24.5 | 40 | 45 |
| 7 | WNSC-PG29PG36 | 1021030071002 | PG29 | PG36 | 8 | 27.5 | 50 | 75.5 |
| 8 | WNSC-PG36PG42 | 1021030081002 | PG36 | PG42 | 9 | 27.5 | 57 | 85 |
| 9 | WNSC-PG42PG48 | 1021030091002 | PG42 | PG48 | 10 | 28 | 65 | 82 |

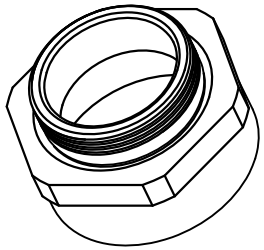

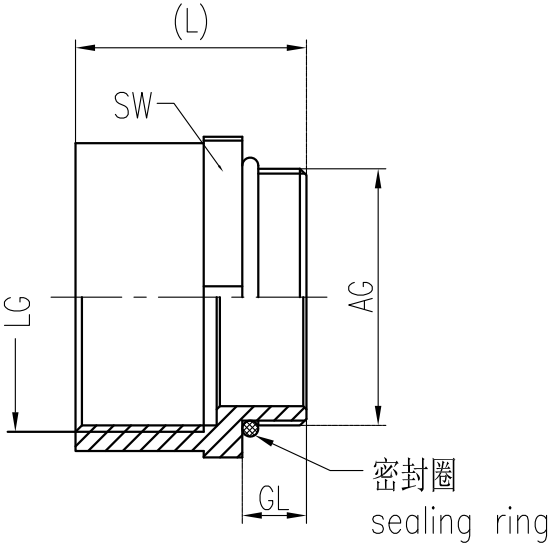


技术参数:
- 材料:
  - 主体: 黄铜镀镍
  - 密封元件: NBR
- 温度范围: -40℃-100℃,短时间可以达到120℃
- 形状: 六角
- 使用场合: 适用于需要将螺纹直径扩大的场合
- 防护等级: IP68（在使用O型圈的情况下）

Technical specification:
- Material:
  - Body: nickel-plated brass
  - Sealing: NBR
- Temperature range: -40℃-100℃, short-term 120℃
- Shape: hexagonal
- Applications: apply to the situation of the diameter need to be enlarged
- Degree of protection: IP68(with O-sealing)

| 标记 Mark | 处数 Number | 变更描述/Description | 签名 Signature | 日期 Date |
|---|---|---|---|---|
| | | | | |
| | | | | |
| | | | | |

| | 姓名/Name | 日期/Date | | 姓名/Name | 日期/Date |
|---|---|---|---|---|---|
| 绘图 Drawn | BQ LUO | 18.10.2010 | 标准化 Stand. | – | – |
| 审核 Checked | P RAO | 18.10.2010 | | | |
| 工艺 Process | – | – | 批准 Approved | YY LIN | 18.10.2010 |

| | | | |
|---|---|---|---|
| 表面处理 Finish | – | | |
| 材料 Material | – | | |
| 比例 Scale | 版本 REV. | 重量 Weight | 数量 Qty. |
| 2:3 | V1.1 | 29.2g | – |

All Dimensions in mm
Original Size DIN A 4

| | |
|---|---|
| 图号 Drawing No. | – |
| 产品代号 Part Code | WNSC-M20M25 |
| 产品料号 Part No. | 1021030151002 |
| 产品名称 Part Name | – |

厦门唯恩电气有限公司
XIAMEN WAIN ELECTRICAL CO.LTD